625LHSK-A100 (100 mm)

625 Extended Barrel CNC Spindle Series

air turbine spindles®

Integration of the popular **HSK-A100** tool holder into the 625 spindle housing delivers constant high speed with ultra-low vibration and improves accuracy and rigidity. This spindle has the reach for deep pockets, robotic face or edge milling, or finishing operations up to **0.5 HP** (0.37 kW) at **30,000, 40,000 or 50,000 RPM**. Air Turbine Spindles® patented constant governed high-speed operation under load cuts faster and cleaner – achieving major savings. Faster cutting with small end mills and drills, finishing or polishing with super accuracy. High-speed cutting improves finish quality and accuracy with a fast light pass of your tool. No duty cycle.

625LHSK-A100 (100 mm) Dimensions

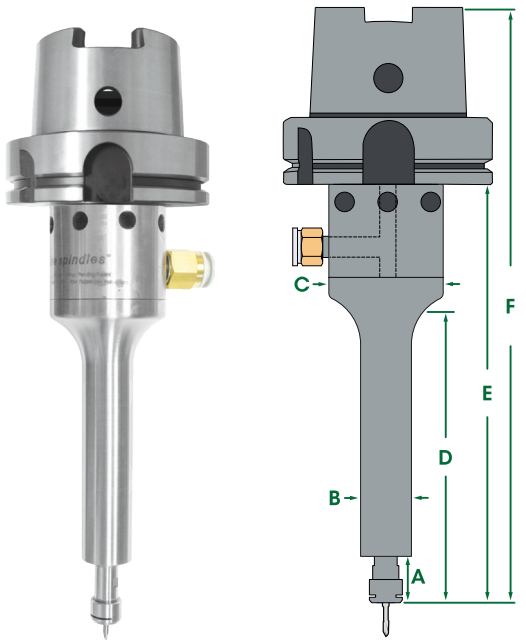

All fittings, couplings, and hoses must have a minimum of 6 mm internal diameter.

A	0.8" (22.57 mm)	**D**	5.8" (147.56 mm)
B	Ø 1" (25.47 mm)	**E**	9.52" (241.96 mm)
C	Ø 2.25" (57.18 mm)	**F**	11.28" (286.6 mm)

625LHSK-A100 (100 mm) Specifications

Speed	30,000 RPM	40,000 RPM	50,000 RPM
Power Rating	0.4 HP (0.3 kW)	0.45 HP (0.33 kW)	0.5 HP (0.37 kW)
Inlet Air Pressure	90 psi (6.2 bar)		
Air Consumption Idle	12 CFM (5.66 L/s)	14 CFM (6.61 L/s)	
Air Consumption Working Flow	11 CFM - 20 CFM (5.19 L/s - 9.44 L/s)		
Air Hoses and Fittings Minimum Size	6 mm internal diameter		
Sound Level	Less Than 78 dBA		
Max Shank Capacity	ER11 UP - 1/4" (6 mm)		
Spindle Weight	105.8 oz (3.0 kg)		

625LHSK-A100 (100 mm) Series Part Numbers

ER11 UP - 1/4"		ER11 UP - 6 mm	
Speed	**Part Number**	**Speed**	**Part Number**
30,000 RPM	65110	30,000 RPM	65111
40,000 RPM	65112	40,000 RPM	65113
50,000 RPM	65114	50,000 RPM	65115

Accessories

Model	Part Number
High Flow Filter / Regulator / Extractor	30008
Tube 10 mm O.D. - 6 mm I.D. (order by foot)	16508
Hose & Fitting - 10 mm O.D. - 6 mm I.D. - 12'	30043

Equipment Included

- 625LHSK-A100 (100 mm) spindle
- Combo Filter Extractor
- ER11 UP Collet System (1/4" or 6 mm standard)
- Collet Wrenches
- Air Hose
- Fittings
- Plug (For alternate air inlet not in use.)
- Coolant Guard
- Coolant Tube
- Coolant Shield
- Carrying Case

Standard Equipment

ER11 UP collet system. 1/4" or 6 mm standard, other sizes are available.

Oil-free 90 psi / 6.2 bar clean, dry air supply required.

Tel:+1.561.994.0500 • www.airturbinetools.com • ask@airturbinetools.com

Supply is subject to Air Turbine Technology Inc, (ATT) distributor policies and upon terms and conditions contained in the ATT distributor agreement. Subject to availability, change of specifications, price and terms without notice. Always use a 0.3 micron filter/extractor and check specified air flow. 6.2 bar / 90 psi clean, dry, oil-free air only. Use eye protection and follow safety instructions. All specifications approximate. All tools are tested and rated to be within 10% of designated speed. © 2026 Air Turbine Technology, Inc. All rights reserved.

Air Turbine Spindles® Quick User Notes and Setup Guide

625L Extended Barrel CNC Spindle Series

air turbine spindles®

Initial Installation

Install a new dedicated clean air line from the included filter/regulator to your Air Turbine Spindle® as shown below. **Ensure all air lines, couplings and fittings meet the minimum internal diameter (ID) of 6 mm.** Any connections smaller than 6 mm will restrict air flow and reduce power to your Air Turbine Spindle®. Additionally, place a plug in any air inlet that is not being used.

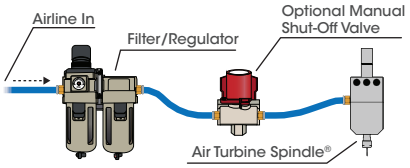

Air flow restrictions (such as air leaks) will cause underpower performance and drag your tool through the material, damaging the bearings. **Some fittings with nominal internal dimensions may have an internal diameter passage that is smaller than stated and restrict air flow and power.** It only takes one fitting with an internal diameter that is too small to reduce air flow and power of your Air Turbine Spindle®.

Air Requirements

Do not oil or lubricate. Use dry, clean, oil free 90 psi (6.2 bar) air supply only. Ensure there is sufficient volume of clean compressed air flow at 90 psi (6.2 bar) with **11 CFM - 20 CFM (5.19 L/s - 9.44 L/s)** to maintain working air consumption. Depending on application, consider peak or stall capacity consumption.

Our patented governor increases air flow volume on demand to keep rotation at the high speed when your tool starts to cut. **Air pressure and flow volume must be available on demand and remain constant with no drop over time or when cutting.** Avoid pressure below 90 psi / 6.2 bar, which causes rapid bearing wear and underpowered performance. Do not use more than 100 psi / 6.9 bar pressure which will burst the turbine power producer. Air pressure and flow must remain constant with no drops under cutting load. Insufficient flow will cause the rotation of your tool to slow or stop suddenly, damaging the bearings. If a drop in psi (bar) occurs below 90 psi (6.2 bar), your compressor may not have enough CFM (L/s) to power the Air Turbine Spindle® or there is a flow restriction in the air line.

Maintenance

Your Air Turbine Spindle® must be run at least 10 minutes every 30 days from manufacture date to maintain optimal performance. Run at least 10 minutes before initial use.

The airline must be impeccably clean with no coupling or hose smaller than 6 mm internal diameter. The included 0.3 micron filter extractor regulator combination is a necessary accessory for Air Turbine Spindles® to eliminate impurities in your air supply. Contamination will damage your turbine components and require repair. **Filter elements need to be changed periodically, and extractor drained in regular maintenance cycles.**

Replacement elements and a repair service are available on our website.

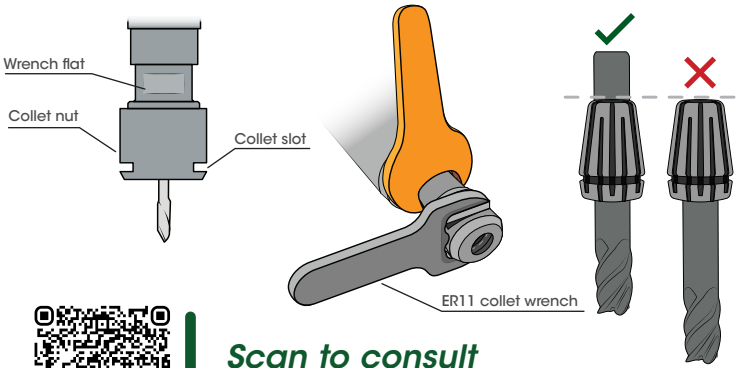

Scan to consult full user instructions.

WARNING
Connection to air supply starts motor rotation. Do not connect air to your tool until installation is complete.

Operation

Purge the line of contamination and run at least 10 minutes before initial use to ensure the bearing lubrication does not solidify.

Monitor the air pressure gauge during operation of your Air Turbine Spindle®. The key to successful high-speed machining and optimized tool performance is to program light passes at very high feed rates. Start with a light pass observing surface finish quality and gradually step down or increase your rate of advance for optimal cutting conditions. Do not try to cut too aggressively. You will overload your turbine causing your cutting tool to stall or drag in the material. Dragging your tool on the work or a sudden stop will cause stress to the bearings and force the grease out, causing premature failure.

Programming your Air Turbine Spindle®

Apart from a few instances, Air Turbine Spindles® will run your normal CAM programs. All you need to do is remove the spindle RPM command (S3000) and the rotation direction command (M3 or M4). At high speed a small concentric speed rated cutting tool should be used with a fast advance using shallow depths of cut. This layering programming technique produces clean cutting action and optimizes tool performance and life.

Spindle Commands

Gradually increase depth of cut to establish optimal cutting conditions. Use M05 on Fanuc type controls to ensure main spindle is turned off. **Always ensure main spindle is programmed not to rotate (S0/M05).**

Canned Cycles

Beware that on CNC controls the G81, G82, G83 (peck drilling) commands will turn on the machine spindle, even with M05 (spindle stop). In most drilling applications you will not need to peck thanks to the high-speed of your Air Turbine Spindle®. There are several alternative solutions: Some CAM programs will allow you to program to drill without a canned cycle or you could program the path long hand or you can use macros.

Dry Run, Graphic Run

Always run the CNC machine program in graphics and/or in a slow dry run to verify that the CNC spindle does not turn on and that you have no obstruction.

Disable CNC Main Spindle RPM

Program your CNC machine control to allow for normal operation without spindle rotation.

Installation or Removal of Collet and Cutting Tool

1. Take the wrench included with your Air Turbine Spindle® and insert it to the wrench flat of your Air Turbine Tool's shaft.
2. Take the ER11 collet wrench included with your Air Turbine Spindle® and apply it on the collet slot as shown in the left diagram. Turn the wrench counterclockwise to release the current cutting tool.
3. After the cutting tool is free, continue to turn the collet nut counterclockwise with the ER11 collet wrench to fully remove the collet nut and release the existing collet. Remove the wrench from the shaft.
4. Remove the existing collet from the shaft and replace it with the new collet. Re-apply the collet nut by turning it clockwise on the shaft. **The 625L series of Air Turbine Spindles® requires 7 ft-lbs of torque to tighten.**
5. Insert the new cutting tool by sliding it into the shaft of your tool. Ensure that the new cutting tool goes completely through the collet as shown to the left. **The stick-out extension length of the cutting tool from your collet should optimally be no more than 3 times the diameter of your cutting tool.**
6. Re-insert the wrench onto the wrench flat of your Air Turbine Tool's shaft and turn the collet nut clockwise until it's firmly held. **Do not over tighten the collet nut.** The ER11 collet nut used for the 625 series of Air Turbine Spindles® requires 7 ft-lbs of torque to tighten.
7. Insert the collet wrench into the collet nut and turn it clockwise to ensure the new collet and cutting tool is firmly held.

Tel:+1.561.994.0500 • www.airturbinetools.com • ask@airturbinetools.com

Supply is subject to Air Turbine Technology Inc. (ATT) distributor policies and upon terms and conditions contained in the ATT distributor agreement. Subject to availability, change of specifications, price and terms without notice. Always use a 0.3 micron filter/extractor and check specified air flow. 6.2 bar / 90 psi clean, dry, oil-free air only. Use eye protection and follow safety instructions. All specifications approximate. All tools are tested and rated to be within 10% of designated speed. © 2024 Air Turbine Technology, Inc. All rights reserved.