800LT
Miniature Live Tools for Swiss Automatics

Medical, aviation, and metalworking industries increase productivity dropping the **800LT** into Automatic Lathes. These sliding headstock lathes operate 7 days a week under enormous cost and time pressure. Economic production success depends on the speed and reliability of motor drive but the outdated motor technology has restricted productivity and resulted in high costs. **The 800LT series operates 24/7 at 60,000/80,000 RPM accelerating your production rate.** This powerful patented spindle has a governor which maintains your rated speed in the cut. Air Turbine Live Tools® are low friction direct drives with only 2 moving parts resulting in no heat and great reliability at high speed. Just connect 90 psi, 6.2 bar dry clean air supply, and mill on your automatic.

800LT 19.05 mm OD Dimensions

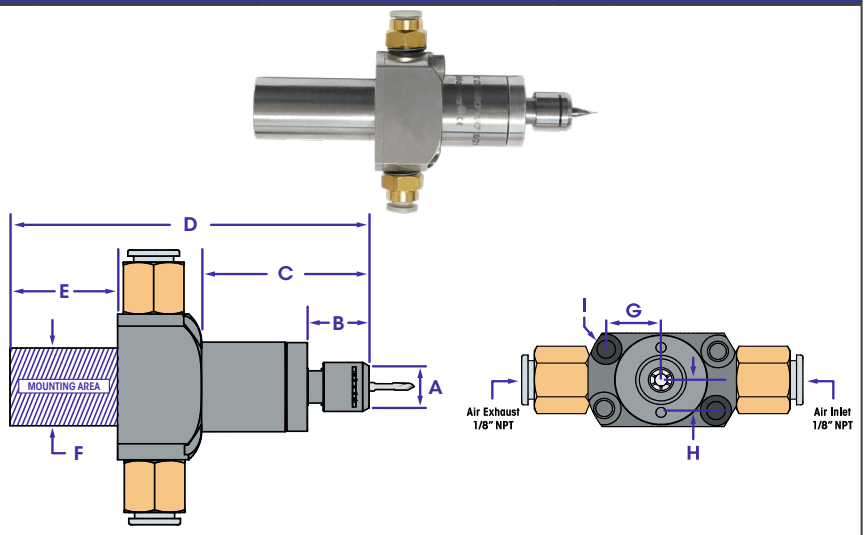

All fittings, couplings, and hoses must have a minimum of 4 mm internal diameter.

A	Ø 0.47" (12 mm)	E	1.0" (25.4 mm)	I	Ø 0.17" (4.32 mm) THRU Ø 0.29" (7.36 mm) ↧ 0.16" (4.06 mm) TYP (2)
B	0.57" (14.47 mm)	F	Ø 0.75" (19.05 mm)		
C	1.56" (39.62 mm)	G	0.51" (12.95 mm) TYP (2)		
D	3.34" (84.84 mm)	H	0.3" (7.62 mm) TYP (2)		

800LT Specifications

Speed	60,000 RPM	80,000 RPM
Power Rating	0.1 HP (0.07 kW)	
Inlet Air Pressure	90 psi (6.2 bar)	
Air Consumption Idle	3.5 CFM (1.65 L/s)	
Air Consumption Working Flow	5 CFM (2.36 L/s)	
Air Hoses and Fittings Minimum Size	4 mm internal diameter	
Sound Level	Less Than 78 dBA	
Max Shank Capacity	ER8 UP - 1/8" (3 mm)	
Live Tool Weight	5.6 oz (0.158 kg)	

800LT Series Part Numbers

ER8 UP - 1/8"		ER8 UP - 3 mm	
Speed RPM	Part Number	Speed RPM	Part Number
60,000	80002	60,000	80003
80,000	80006	80,000	80007

19.05, 20, 22, 25 mm outside diameter models available.
Specify outside diameter when ordering.

Accessories

Model	Part Number
Low Flow Filter Regulator / Extractor	30006
Tube 6 mm O.D. - 4 mm I.D. (order by foot)	16520
Hose & Fitting - 6 mm O.D. - 4 mm I.D. - 12'	30041

Equipment Included

- 800LT Air Turbine Live Tool®
- ER8 UP Collet System (1/8" or 3 mm)
- Collet Wrenches
- Low Flow Filter Regulator / Extractor
- Air Hose
- Fittings
- Carrying Case

Standard Equipment

ER8 UP collet system (1/8" or 3 mm collet).

Oil-free 90 psi / 6.2 bar clean, dry air supply required.

WARNING
Connection to air supply starts motor rotation. Do not connect air to your tool until installation is complete.

Tel:+1.561.994.0500 • www.airturbinetools.com • ask@airturbinetools.com

Supply is subject to Air Turbine Technology Inc, (ATT) distributor policies and upon terms and conditions contained in the ATT distributor agreement. Subject to availability, change of specifications, price and terms without notice. Always use a 0.3 micron filter/extractor and check specified air flow. 6.2 Bar / 90 psi clean, dry, oil-free air only. Use eye protection and follow safety instructions. All specifications approximate.
© 2024 Air Turbine Technology, Inc. All rights reserved.

800LT
Miniature Live Tools for Swiss Automatics

air turbine live tools®

800LT 20 mm OD Dimensions

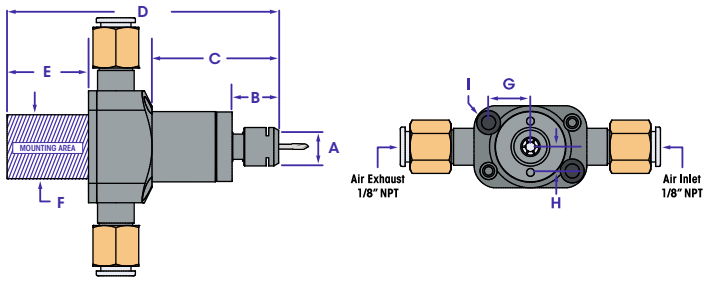

A	Ø 0.47" (12 mm)	E	1.0" (25.4 mm)	I	Ø 0.17" (4.32 mm) THRU Ø 0.29" (7.36 mm) ↧ 0.16" (4.06 mm) TYP (2)
B	0.57" (14.47 mm)	F	Ø 0.79" (20 mm)		
C	1.56" (39.62 mm)	G	0.51" (12.95 mm) TYP (2)		
D	3.34" (84.84 mm)	H	0.3" (7.62 mm) TYP (2)		

800LT 22 mm OD Dimensions

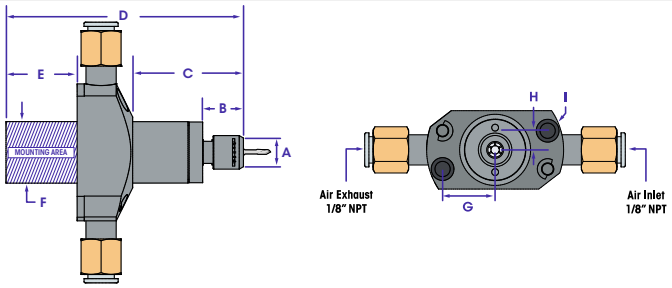

A	Ø 0.47" (12 mm)	E	1.0" (25.4 mm)	I	Ø 0.22" (5.58 mm) THRU Ø 0.32" (8.13 mm) ↧ 0.3" (7.62 mm) TYP (2)
B	0.57" (14.47 mm)	F	Ø 0.87" (22 mm)		
C	1.56" (39.62 mm)	G	0.74" (18.8 mm) TYP (2)		
D	3.34" (84.84 mm)	H	0.27" (6.86 mm) TYP (2)		

800LT 25 mm OD Dimensions

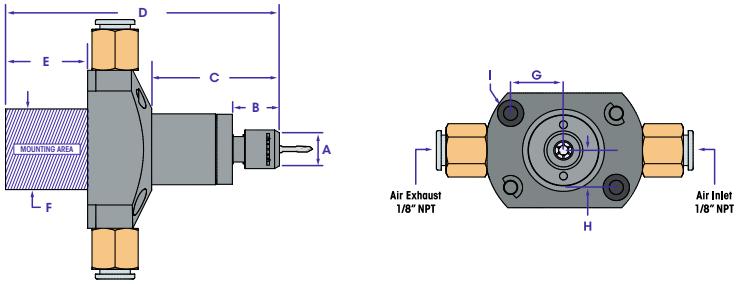

A	Ø 0.47" (12 mm)	E	1.0" (25.4 mm)	I	Ø 0.17" (4.32 mm) THRU Ø 0.32" (8.13 mm) ↧ 0.46" (11.68 mm) TYP (2)
B	0.57" (14.47 mm)	F	Ø 0.98" (24.89 mm)		
C	1.56" (39.62 mm)	G	0.65" (16.51 mm) TYP (2)		
D	3.34" (84.84 mm)	H	0.45" (11.43 mm) TYP (2)		

Initial Installation

Install a new dedicated clean air line from the included filter/regulator to your Air Turbine Live Tool®. **Ensure all air lines, couplings and fittings meet the minimum internal diameter of 4 mm.** If working in a wet environment be sure to install exhaust hoses as shown below. Internal diameters of exhaust hoses must be no smaller than 4 mm internal diameter.

Any connections smaller than 4 mm will restrict air flow and reduce power to your 800LT.

Air flow restrictions (such as air leaks and obstructions) will cause underpower performance and drag your tool through the material, damaging the bearings. **Some fittings with nominal internal dimensions may have an internal diameter passage that is smaller than stated and restrict air flow and power.** It only takes one fitting with an internal diameter that is too small to reduce air flow and power of your Air Turbine Live Tool®.

Air Requirements

Do not oil or lubricate. Use dry, clean, oil free 90 psi (6.2 bar) air supply only.

Ensure there is sufficient volume of compressed air flow at 90 psi/6.2 bar with **5 CFM (2.36 L/s)** to maintain working air consumption. Depending on application, consider peak or stall capacity consumption.

Air flow volume increases on demand to keep rotation at the high speed when your tool starts to cut. Air pressure and flow volume must therefore be available on demand and remain constant with no drop over time or when cutting. Avoid pressure below 90 psi/6.2 bar, which causes the tool to be dragged through the material, causing rapid bearing wear and underpowered performance. Do not use more than 100 psi/6.9 bar pressure which will burst the turbine power producer. Air pressure and flow must remain constant with no drops under cutting load. Insufficient flow will cause the rotation of your tool to slow or stop suddenly, damaging the bearings. If a drop in psi (bar) occurs below 90 psi (6.2 bar), your compressor may not have enough CFM (L/s) to power the Air Turbine Live Tool® or there is a flow restriction in the air line.

Mounting your Air Turbine Live Tool®

It is very important your fixture is not clamped over the bearings. Incorrect positioning or over tightening of the clamp on your Air Turbine Live Tools® steel barrel results in pressure on the bearings causing premature failure. To avoid this error in installation refer to the dimensional drawing for your model on this sheet.

Maintenance

Your Air Turbine Live Tool® must be run at least 10 minutes every 30 days from manufacture date to maintain optimal performance. Run at least 10 minutes before initial use. The airline must be impeccably clean with no coupling or hose smaller than 4 mm internal diameter. The included 0.3 micron filter extractor regulator combination is a necessary accessory for Air Turbine Live Tools® to eliminate impurities in your air supply. Contamination will damage your turbine components and require repair. **Filter elements need to be changed periodically and extractor drained in regular maintenance cycles.** Replacement elements and a repair service are available on our website.

Scan to consult full user instructions.

Tel:+1.561.994.0500 • www.airturbinetools.com • ask@airturbinetools.com

Supply is subject to Air Turbine Technology Inc, (ATT) distributor policies and upon terms and conditions contained in the ATT distributor agreement. Subject to availability, change of specifications, price and terms without notice. Always use a 0.3 micron filter/extractor and check specified air flow. 6.2 Bar / 90 psi clean, dry, oil-free air only. Use eye protection and follow safety instructions. All specifications approximate.
© 2024 Air Turbine Technology, Inc. All rights reserved.